Note: 1. "◇"Special Dimension(PPK/CPK Data Needed>1.67); "**"Control Dimension; All Unmarked "◇" OR "**" Dimensions are Reference Dimensions and No Measurement Needed.
2. No Use of Prohibited Substances defined in SOP-E-QS-009 and Only purchase Designated Raw Materials from Green Partners. 3. A B C are the datum reference. 4. Application opening window < LCD V.A.
B 5. The heater resistance and power rating: 55 ohm (TYP), 4.5W

PIN ASSIGNMENT

PIN	SYMBOL	PIN	SYMBOL
1	NC	21	WR1
2	VLCD	22	WR0
3	VLCDIN_EXT	23	RST
4	PUMP_OUT	24	D0
5	VB0+	25	D1
6	VB1+	26	D2
7	VB1−	27	D3
8	VB0−	28	D4
9	VA0+	29	D5
10	VA1+	30	D6
11	VA1−	31	D7
12	VA0−	32	D8
13	VDD	33	D9
14	VSS	34	D10
15	ID	35	D11
16	TEST4	36	D12
17	BM1	37	D13
18	BM0	38	D14
19	CS0	39	D15
20	CD	40	NC

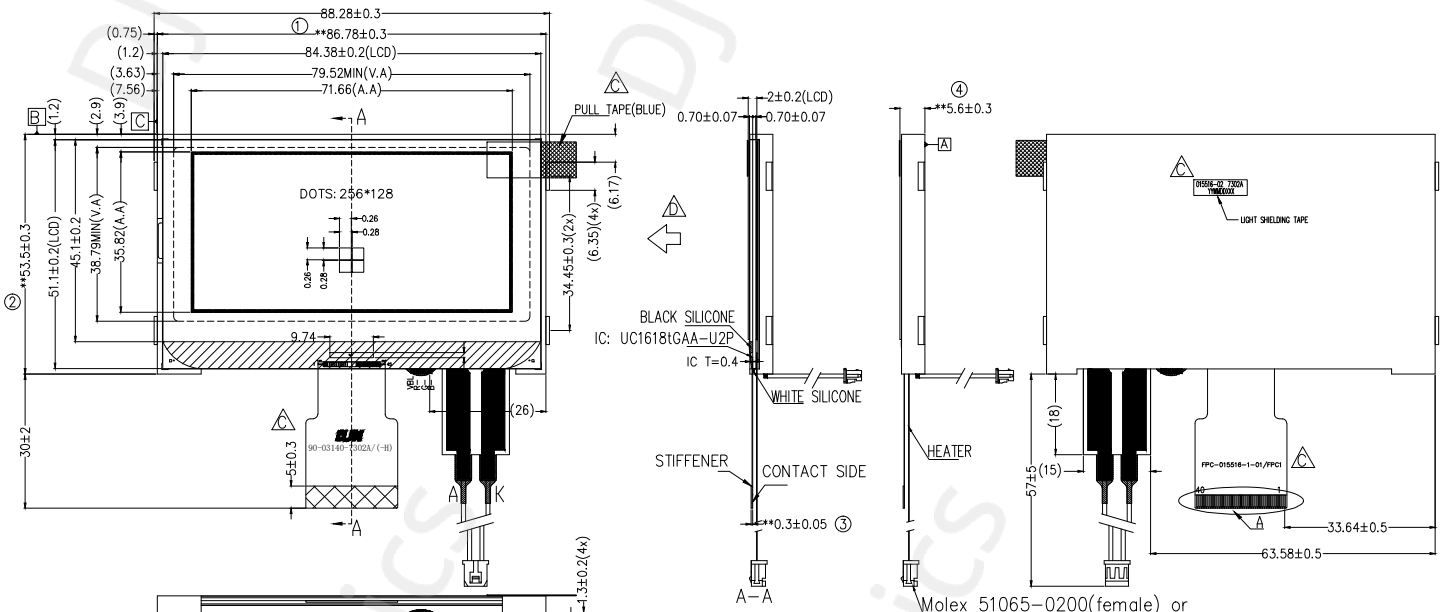

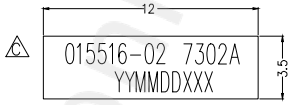

LIGHT SHIELDING TAPE WITH DATE CODE

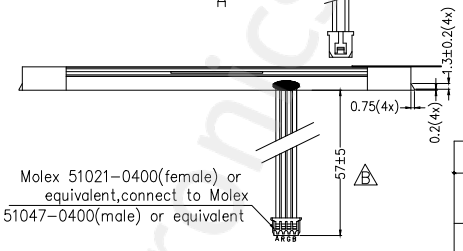

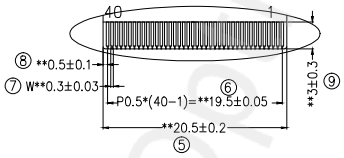

SECTION A 2:1

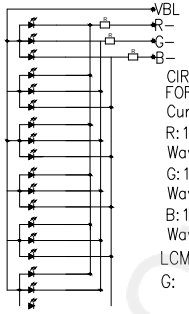

CIRCUIT DESIGN (RGB LED 1x6=6dies)
FORWARD Voltage @VF=3.2V
Current & Wavelength:
R: 120mA(MAX)
Wavelength: 617~627nm
G: 120mA(MAX)
Wavelength: 515~525nm
B: 120mA(MAX)
Wavelength: 464~474nm
LCM LUMINANCE: R: 35 cd/m2 (TYP),
G: 115cd/m2 (TYP), B: 25cd/m2 (TYP)

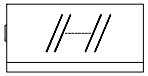

FRONT SIDE
面光片保护膜划线

划线的 数量、方向没有指定,
划线只是为了鉴别保护膜没有被撕掉

Line marking on LCD protective film (quantity and direction are not specified as long as there have a marking to identify protective film is not removed)

For Customer Attention:

IC Datasheet Version:	UC1618t_A1.3(October.7,2013)
Normal/High power mode select:	N/A
Interface type:	parallel(Yes)/serial(Yes)/IIC(Yes)
MPU Timing select:	68(Yes)/80(Yes)
COM scaning:	COM128~COM1
SEG Scanning:	SEG1-SEG256
Temperature gradient coefficient:	Software select

VDD(TYP)= 3.0V (THIS VALUE WILL BE USED FOR Unicorn FUNCTIONAL TESTING SETTING,PLEASE SPECIFY IF DIFFERENT FROM THIS VALUE)

TYPE	D ASTN ,POSITIVE, Transflective	D	Change TYPE & VIEWING DIRECTION	LJ	250917
VIEWING DIRECTION	D 3 O'clock	C	Change CUSTOMER P/N &ADD PULL TAPE & FPC add LOGO & change label	LJ	250912
DRIVE CONDITION	~14.6V 1/128Duty 1/10Bias	B	ADD CUSTOMER P/N & Note & change backlight cable length	LJ	250723
Top	−40°C ~ 85°C	A	FIRST RELEASE(BASE ON -01 ADD ITO HEATER)	LJ	250516
Tst	−40°C ~ 85°C	SYM	REVISION RECORD	REVISED by	DATE

Customer approve

DJN 帝晶光电 DJN OPTRONICS TECHNOLOGY CO., LTD.

Model No	90-03140-7302A	Part No	SZA6878	
Drawing Title	3.15"LCM	Drawn	zly	A2
Drawing No	D-RD-***-25	Checked	Kun Cai	Unit MM
Scale 1:1	第三视角	Approve	leo	Page 1/1